STATE OF NEVADA
DEPARTMENT OF EDUCATION

2009 - 2010

OUT-OF-SERVICE MANUAL

Keith W. Rheault
Superintendent of Public Instruction

Gloria Dopf
Deputy Superintendent, Instructional, Research & Evaluative Service

James R. Wells
Deputy Superintendent, Administrative & Fiscal Services

Jerry Barbee
Director, Teacher Licensing

Diana Hollander
Program Officer, Pupil Transportation

NEVADA STATE BOARD OF EDUCATION
Nevada State Board for Career & Technical Education

2009 - 2010

MEMBERS

INTRODUCTION

The purpose of the Nevada Out-of Service Manual is to identify items on a school bus that would require the bus be placed out-of-service. The Out-of-Service manual was approved by the State Board of Education at their May 2 and 3, 2008 meeting**.** The manual is effective as of that date.

The Nevada School Bus Out-of-Service Inspection Manual has utilized the *Commercial Vehicle Safety Alliance's 2009 Out-of-Service Criteria* to produce this manual. The department would also like to thank all the Nevada Highway Patrol and statewide school district transportation personnel for their assistance in developing and updating this manual. This document was approved by the Nevada State Board of Education during the June 25th and 26th, 2009 State Board of Education meeting and is effective July 1, 2009.

NRS 392.400**,** gives authority to the Nevada Highway Patrol to inspect school buses in Nevada semiannually. The Nevada Highway Patrol has the authority to place any bus out-of-service for any violation listed in this manual. If the specific item is not listed in this manual, the violation is noted as a deficiency on the School Bus Inspection Form. School buses are inspected according to the Nevada State School Bus Standards, approved by the State Board of Education.

Common sense must be used if a school bus has an Out-of-Service violation while transporting students. If the violation is not a serious mechanical failure and does not immediately impact the safe transportation of the students, then the school bus is allowed to return to the safest spot or destination, whichever comes first.

If you have questions regarding this document, please contact Diana Hollander, Program Officer, Pupil Transportation Department, Nevada Department of Education. 1820 East Sahara, Suite 205, Las Vegas, Nevada 89102. Phone number is 702-486-6626 and email address at dhollander@doe.nv.gov.

TABLE OF CONTENTS

I. **DRIVER OUT-OF-SERVICE CRITERIA** 6

II. **VEHICLE OUT-OF-SERVICE CRITERIA** 7

A. BRAKE SYSTEMS

1. DefectiveBakes 7
2. Front Steering Axle(s) Brakes 11
3. Spring Brake Chamber..... 13
4. Parking Brake.....13
5. Brake Malfunction 13
6. Brake Drums or Rotors (discs) 13
7. Brake Hose and Tubing 13
8. Low Pressure Warning Device 13
9. Air Loss Rate 14
10. Air Reservoir.....14
11. Air compressor.....14
12. Hydraulic Brakes 14
13. Vaccum System 15

B. ELECTRICAL CABLES AND SYSTEMS IN ENGINE AND BATTERY COMPARTMENTS

1. Electrical Cables and Systems in Engine and Battery Compartment 15

C. EMERGENCY EQUIPMENT

1. Fire Extinguisher.....15
2. First Aid and Body Fluid Kit 15
3. Emergency Warning Devices.....15

D. EMERGENCY EXITS.....16

E. EXHAUST SYSTEM.....16

F. FRAMES & BODY

1. Frame Members 16
2. Roof/Body Structure 17

G. FUEL SYSTEM

1. Liquid Fuels 17
2. Gaseous Fuels 18

H. LIGHTING DEVICES (Headlamps, Tail Lamps, Stop Lamps, Turn Signals and Lamps) 19

I. MISCELLANEOUS

1. Aisle 19
2. Crossing Control Arm 19
3. Defrosters 20
4. Handicap Wheelchair Lift 20
5. Handrails 20
6. Horn 20
7. Seats 20
8. Seat Belts 20
9. Stop Signal Arms 20
10. Windows 21

J. STEERING MECHANISM

1. Steering Wheel Lash **(**Free Play**)** 21
2. Steering Column 21
3. Front Axle Beam and all Steering Components Other than the Steering Column 21
4. Steering Gear Box 22
5. Pitman Arm 22
6. Power Steering 22
7. Ball and Socket Joints 22
8. Tie Rods and Drag Links 22
9. Nuts 23
10. Steering System 23

K. SUSPENSION

1. Axle Parts/Members 23
2. Spring Assembly 23
3. Composite Springs 24
4. Torque, Radius, or Tracking Components 25

L. TIRES

1. Any Tire on any Front Steering Axle 27
2. All Tires other than those found on the Front Steering Axle 27

M. WHEELS AND RIMS

1. Lock or Side Ring 29
2. Rim Cracks 29
3. Disc Wheel Cracks 29
4. Bolt/Stud Holes (Disc Wheels) 29
5. Spoke Wheel Cracks 29
6. Tubeless Demountable Adapter Cracks 29
7. Wheel Fasteners 29
8. Welds 29
9. Hubs 29
10. Tire and Wheel Clearance 30

N. WINDSHIELD WIPERS 30

I. DRIVER OUT-OF-SERVICE CRITERIA

A. Does not possess a valid CDL issued by his/her state.

NOTE: This includes, but is not limited to: improper class, expired, cancelled, revoked, disqualified, suspended, or withdrawn.

B. A driver with a CDL learner's permit who is not accompanied by the holder of a valid CDL.

C. Operating a commercial vehicle without the proper endorsements or in violation of restrictions. (383.23(a)(2), 391.11(b)(5))

D. Does not possess the proper class of license for vehicle being operated. (383.91(a))

E. Operating a commercial vehicle without corrective lenses or hearing aid as indicated on the driver's medical certificate. (391.11(b)(4))

F. When an inspector has knowledge and/or evidence that a driver is/is not in possession of a valid medical certificate, and is not in possession of any and all required exemptions for the following conditions: vision, hearing, insulin-using diabetes, epilepsy or any other conditions which is likely to cause loss of consciousness or any loss of ability to control a commercial motor vehicle. (391.11(b)(4))

G. The driver of a motor carrier must be able to communicate in the country in which the driver is operating. Any driver who is unable to communicate sufficiently to understand and respond to official inquiries and directions in English is Out-of-Service. (391.11(b)(2))

H. When so impaired that the driver should not continue on the trip. (392.3)

I. Any driver in possession of drugs or other substances or who is under the influence. (392.4(a))

J. Any driver who is under the influence of intoxicating beverage, consumes an intoxicating beverage regardless of its alcohol content, or have any measured alcohol concentration or any detected presence of alcohol while on duty, or operating or in physical control of a motor vehicle. (293.5(a))

K. Any driver who has been on-duty for 10 hours in a 15 hour period, or who has not had the required 10 consecutive hours of off-duty time or who has been on-duty more than 60 hours in 7 consecutive days or 60 hours in 7 consecutive days or 70 hours in 8 consecutive days.

L. Any driver not in possession of a record of duty status when one is required. (395.8(a))

II. VEHICLE OUT-OF-SERVICE CRITERIA

A. BRAKE SYSTEMS

1. **Defective Brakes**

   a. The number of defective brakes is equal to or greater than 20 percent of the service brakes on the vehicle. A defective brake includes any brake that meets one of the following criteria.

      NOTE: Steering axle brakes under item 1.b Front Steering Axle(s) Brakes, are to be included in the 20 percent criterion.

   b. Absence of effective braking action upon application of the service brakes (such as brake linings failing to move or contact braking surface upon application.) (393.48(a))

   c. Drum (Cam-Type and Wedge) Air brakes.

      (1) Missing or broken brake shoe, lining, return spring, anchor pin, spider, cam roller, camshaft, pushrod, yoke, clevis pin, brake adjustment, parking brake power spring, or air chamber mounting bolt. (393.48(a))

      (2) Loose air chamber~~s~~, spider, or camshaft support bracket~~s~~. (393.48(a))

      (3) Defective lining conditions. (393.47)

         (a) Lining cracks or voids that exceed 1/16 inch (1.6 mm) in width observable on the edge of the lining.

         (b) Portion of lining segment missing such that a fastening device (rivet or bolt) is exposed when viewing the lining from the edge.

         (c) Crack exceeds 1-1/2 inch (38.1mm) in length.

         (d) Loose lining segment. (Approximately 1/16 inch (1.6 mm) or more movement.)

         (e) Complete lining segment missing.

         (f) The friction surface of the brake drum and the brake friction material are contaminated by oil, grease, or brake fluid.

            NOTE: Also refer to Wheels, Rims and Hubs

         (g) Lining thickness less than ¼ inch (6.5 mm) or to wear indicator if lining is so marked, measured at the shoe center.

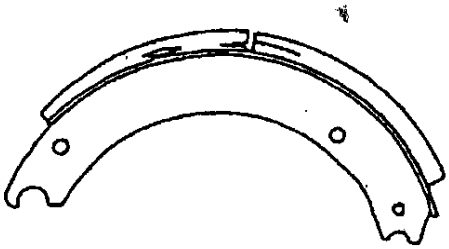

Out-of-Service
Cracks or voids that exceed 1/16" in width
Cracks that exceed 1 1/2 " in length

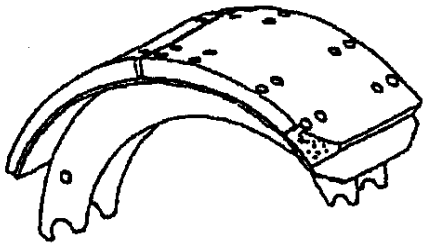

Out-of-Service
Portion of lining missing that exposes a fastening device.

(4) Air Disc Brakes (Exposed Pushrods and Direct Coupled – air Chamber to Caliper)

(a) Missing or broken caliper, brake pad, pad retaining component, pushrod, yoke, clevis pin, brake adjuster, parking brake power spring, or air chamber mounting bolt. (393.48(a))

(b) Loose or missing brake chamber or caliper mounting bolt. (393.48(a))

(c) Rotor has evidence of metal to metal contact over the rotor friction surface on either side. (393.48(a))

(d) Rotor has severe rusting on the rotor friction surface on either side (light rusting on the friction surface is normal). (393.49(a))

(e) The friction surface of the brake rotor and the brake friction material are contaminated by oil or grease. (393.47)

NOTE: Also refer to Wheels, Rims and Hubs if wheel seal is actively leaking.

(f) Brake pad thickness less than 1/16 inch (1.6 mm) or to wear indicator if pad is so marked. (393.47)

(5) Audible Air Leak at air Chamber. (Example: ruptured diaphragm, loose chamber clamp, etc.) (396.3(a)(1))

(6) Brake Adjustment Limits. Bring reservoir pressure between 90 – 100 psi (620 – 690 kPa), turn engine off and then fully apply the brakes. All brake measurement shall be made in 1/8 inch (3.2 mm) increments.

(a) One brake at ¼ inch (6.5 mm) or more beyond the adjustment limit. (Example: Type 30 clamp type air chamber pushrod measured at 2-1/4 inches (57.15 mm) would be one defective brake.) (393.47(e))

(b) A brake found at 1/8 inch (2.3 mm) beyond the brake adjustment limit shall be considered .5 (1/2) a defective brake for determining the number of defective brakes per the 20 percent defective brake criterion. (Example: Type 30 clamp type brake chamber pushrods measure – Two (2) at 2 -1/8 inches (54 mm) equal 1 defective brake). (393.47(e))

(c) Any wedge brake where the combined brake lining movement of both top and bottom shoes exceeds 1/8 inch (3.2 mm). (393.47(f))

(7) Missing brake on any axle required to have brakes. (393.42)

CLAMP TYPE BRAKE CHAMBER DATA		
TYPE	**OUTSIDE DIAMETER**	**BRAKE ADJUSTMENT LIMIT**
6	4-1/2 (114 mm)	1-1/4 (31.75 mm)
9	5-1/4 (133 mm)	1-3/8 (34.93 mm)
12	5-11/16 (145 mm)	1-3/8 (34.93 mm)
16	6-3/8 (162 mm)	1-3/4 (44.45 mm)
20	6-25/32 (172 mm)	1-3/4 (44.45 mm)
24	7-7/32 (184 mm)	1-3/4 (44.45 mm)
30	8-3/32 (206 mm)	2 (50.80 mm)
36	9 (229 mm)	2-1/4 (57.1 5 mm)

NOTE: Service chambers with housings that are permanently crimped and sealed together are considered clamp type chambers even though they do not have a separate clamp band.

NOTE**:** A brake found at the adjustment limit is not a defect for the purposes of the 20% rule.

'LONG STROKE' CLAMP TYPE BRAKE CHAMBER DATA		
TYPE	**OUTSIDE DIAMETER**	**BRAKE ADJUSTMENT LIMIT**
12	5-11/16 (145 mm)	1-3/4 (44.45 mm)
16	6-3/8 (162 mm)	2 (50.80 mm)
20 (2-1/2" rated stroke)	6-25/32 (172 mm)	2 (50.80 mm)
20 (3" rated stroke)	6-25/32 (172 mm)	2-1/2 (63.50 mm)
24 (2-1/2 rated stroke)	7-7/32 (184 mm)	2 (50.80 mm)
24* (3"rated stroke)	7-7/32 (184 mm)	2 -1/2 (63.50 mm)
30	8-3/32 (206 mm)	2 -1/2 (63.50 mm)

NOTE: Rated stroke is indicated on a tag and is only used to identify chamber size.

NOTE: Service chambers with housings that are permanently crimped and sealed together are considered clamp type chambers even though they do not have a separate clamp band.

NOTE: A brake found at the adjustment limit is not a defect for the purposes of the 20% rule.

BOLT TYPE BRAKE CHAMBER DATA		
TYPE	**OUTSIDE DIAMETER**	**BRAKE ADJUSTMENT LIMIT**
A	6-15/16 (176 mm)	1-3/8 (34.93 mm)
B	9-3/16 (234 mm)	1-3/4 (44.45 mm)
C	8-1/16 (205 mm)	1-3/4 (44.45 mm)
D	5-1/4 (133 mm)	1-1/4 (31.75 mm)
E	6-3/16 (157 mm)	1-3/8 (34.93 mm)
F	11 (279 mm)	2-1/4 (57.15 mm)
G	9-7/8 (251 mm)	2 (50.80 mm)

NOTE: A brake found at the adjustment limit is not a defect for the purposes of the 20% rule.

ROTOCHAMBER DATA		
TYPE	**OUTSIDE DIAMETER**	**BRAKE ADJUSTMENT LIMIT**
9	4-9/32 (109 mm)	1-1/2 (38.10 mm)
12	4-13/16 (122 mm)	1-1/2 (38.10 mm)
16	5-13/32 (138 mm)	2 (50.80 mm)
20	5-15/16 (151 mm)	2 (50.80mm)
24	6-13/32 (163 mm)	2 (50.80 mm)
30	7-1/16 (180 mm)	2-1/4 (57.15 mm)
36	7-5/8 (194 mm)	2-3/4 (69.85 mm)
50	8-7/8 (226 mm)	3 (76.20 mm)

NOTE: A brake found at the adjustment limit is not a defect for the purposes of the 20% rule.

DD-3 BRAKE CHAMBER DATA		
TYPE	**OUTSIDE DIAMETER**	**BRAKE ADJUSTMENT LIMIT**
30	8-1/8 (206 mm)	2-1/4 (57.15 mm)

NOTE: This chamber has three air lines and is found on motor coaches.

NOTE: A brake found at the adjustment limit is not a defect for the purposes of the 20% rule.

WEDGE BRAKE DATA
The combined movement of both brake shoe lining scribe marks shall not exceed 1/8 inch (3.20 mm).

2. **Front Steering Axle(s) Brakes**

   a. In addition to being included in the 20 percent criterion, the following criteria place a vehicle in an out-of-service condition:

   b. Any inoperative or missing brake on either wheel of any steering axle of any vehicle equipped or required to be equipped with steering axle brake. (393.42, 393.48(a))

   c. Drum (Cam-type and Wedge) air brakes

      (1) Mismatched brake adjuster length. (393.47(c))

      NOTE: Mismatched air chamber size excludes long stroke air chamber versus regular stroke air chamber and excludes differences in design type such as type 20 clamp versus type 20 rotochamber.

      (2) Mismatched brake adjustment length. (393.47(c))

      (3) Defective lining conditions. (393.47)

         (a) Lining cracks or voids exceed 1/16 inch (1.6 mm) in width observable on the edge of the lining.

         (b) Portion of lining segment missing such that a fastening device (rivet or bolt) is exposed when viewing the lining from the edge.

         (c) Crack that exceeds 1-1/2 inch (38.1 mm) in length.

         (d) Loose lining segment. (Approximately 1/16 inch (1.6 mm) or more movement.)

         (e) Complete lining segment missing.

(f) The friction surface of the brake drum and the brake friction material are contaminated by oil or grease.

NOTE: Also refer to Wheels, Rims and Hubs if wheel is actively leaking.

(g) Lining with a thickness less than 3/16 inch (4.8mm) for a shoe with a continuous strip of lining or ¼ inch (6.5mm) for a shoe with two lining blocks for drum brakes or to wear indicator if lining is so marked.

(4) Air Disc Brakes (Exposed Pushrods and Direct Coupled – Air Chamber to Caliper)

(a) Mismatched air chamber sizes. (393.47(b))

NOTE: Mismatched air chamber sizes excludes long stroke air chamber. A mismatch on an air disc brake exists only when there is measurable difference in air chamber clamp sizes.

(b) Mismatched brake adjuster length. (393.47(c))

(c) Missing brake pad. (393.47)

(d) Rotor has evidence of metal to metal contact over the rotor friction surface on either side. (393.48(a))

(e) Rotor has severe rusting on the rotor friction surface on either side (light rusting on the friction surface is normal). (393.48(a))

(f) The friction surface of the brake rotor and the brake friction material are contaminated by oil or grease. (393.47)

NOTE: Also refer to Wheels, Rims and Hubs if wheel seal is actively leaking.

(g) Brake pad thickness less than 1/16 inch (1.6mm) or to wear indicator if lining is so marked. (393.47)

(5) Hydraulic Brakes

(a) Missing lining or pad. (393.47)

(b) Movement of the caliper within the anchor plate, in the direction of wheel rotation, exceeds 1/8 inches (3.2 mm). (393.48(a))

(c) Rotor has evidence of metal to metal contact over the rotor friction surface on either side. (393.48(a))

(d) Rotor has severe rusting on the rotor friction surface on either side (light rusting on the friction surface is normal). (393.48(a))

(e) The friction surface of the brake drum or rotor and the brake friction material are contaminated by oil, grease, or brake fluid. (393.47)

NOTE: Also refer to Wheels, Rims and Hubs if wheel seal is actively leaking.

(f) Lining with a thickness of 1/16 inch (1.6 mm) or less at the shoe center for disc or drum brakes. (393.47)

3. Any non-manufactured holes or cracks in the **spring brake chamber** housing section of a parking brake. (366.3(a)(1))

4. No brakes on the vehicle are applied upon actuation of the **parking brake** control, including driveline hand controlled parking brakes. (393.41)

5. **Brake malfunction** causing smoke or fire to emit from the wheel end. (393.48)(a))

   Example: Brake lining continuously in contact with brake drum or rotor.

6. **Brake Drums or Rotors (Discs)**

   a. Any portion of the drum has any external crack, or has any crack that opens upon brake application. (393.47(a))

   b. Any rotor (disc) with a crack in length of more than 75 percent of the friction surface and passes completely through the rotor to the center vent from either side or completely through a solid rotor. (393.47(a))

   c. Any portion of the drum or rotor (discs) missing or in danger of falling away. (393.47(a))

      NOTE: Do not confuse short hairline heat check cracks with flexural cracks. (393.47(a))

7. **Brake Hose/Tubing**

   a. Any damage extending through the outer reinforcement ply. (Rubber impregnated fabric cover **is not** a reinforcement ply). (Thermoplastic nylon tube may have braid reinforcement or color difference between cover and inner tube. Exposure of second color is out-of-service.) (393.45(a))

   b. Bulge/swelling when air pressure is applied. (393.45(a))

   c. Audible leak at other than a proper connection. (393.45(a))

   d. Improperly joined such as a splice made by sliding the hose ends over a piece of tubing and clamping the hose to the tube. (393.45(a))

   e. Damaged by heat, broken, or crimped in such a manner as to restrict air flow. (393.45(a))

8. **Low pressure warning device** is missing, inoperative, or does not operate if either the primary or secondary reservoir is at 55 psi (379kPa) and below, or 1/2 of the governor cut-out pressure, whichever is less. (393.51)

NOTE: If either an audible or visual warning device is working as required, vehicle should not be placed out-of-service.

9. **Air Loss Rate**

   a. If an air leak is discovered and either the primary or secondary reservoir pressure is not maintained when: (396.3(a)(1))

      (1) Governor is cut-in;

      (2) Reservoir pressure is between 80 - 90 psi (551-620 KPA);

      (3) Engine is at idle; and

      (4) Service brakes are fully applied.

10. **Air reservoir** security; separated from its original attachment points. (396.3(a)(1))

11. **Air Compressor**

   a. Normally to be inspected when readily visible or when conditions indicate compressor problems.

      (1) Loose compressor mounting bolts. (396.3(a)(1))

      (2) Cracked, broken, or loose pulley. (396.3(a)(1))

      (3) Cracked or broken mounting brackets, braces, or adapters. (396.3(a)(1))

12. **Hydraulic Brakes** (Including Power Assist over Hydraulic and Engine Driven Hydraulic Booster)

   a. No pedal reserve with engine running. (393.40(b))

   b. Master cylinder less than 1/4 full. (396.3(a)(1))

      NOTE: Normally to be inspected when readily visible or problems are apparent. (396.3(a)(1))

   c. Power assist unit fails to operate. (396.3(a)(1))

   d. Seeping or swelling brake hose(s) under application of pressure. (393.45(a))

   e. Missing or inoperable breakaway braking device. (393.43(d))

   f. Hydraulic hose(s) abraded (chafed) through outer cover-to-fabric layer. (393.45)

g. Fluid lines or connections restricted, crimped, cracked, or broken. (393.45(a))

h. Any visually observed leaking hydraulic fluid in the brake system upon full application. (393.45(a))

i. Hydraulic System: Brake failure light/low fluid warning light on and/or inoperative. (393.51

13. **Vacuum System**

a. Insufficient vacuum reserve to permit one full brake application after engine is shut off. (393.50)

b. Vacuum hose(s) or line(s) restricted, abraded (chafed) through outer cover-to-cord ply, crimped, cracked, broken, or has collapse of vacuum hose(s) when vacuum is applied. (393.45(a))

B. ELECTRICAL CABLES AND SYSTEMS IN ENGINE AND BATTERY COMPARTMENTS

1. Electrical Cables and Systems in Engine and Battery Compartment

a. Electrical cable insulation chafed, frayed, damaged, burnt, causing bare cable to be exposed. (393.28, 396.3 (a)(1))

b. Loose or corroded connections at battery posts or unsuitable insulated protection to electronic components. (393.28, 393.77(b)(7), 396.3(a)(1))

c. Missing or damaged protective grommets insulating electrical compartments. (393.30)

d. Broken or unsecured mounting of electrical components. (396.3(a)(1))

e. Electrical cables unsupported, hanging or missing clamps that may cause a chafing or frayed condition. (393.28, 396.3(a)(1))

f. Any visible leaking of lubricant (i.e., engine supplied oil pressure) from electrical component such as alternator, auxiliary heater, etc. (396.5, 3965.3(a)(1))

Note: A cable is the power-conveying part of a high wattage/voltage electrical system. It usually has no circuit overload protection included in the system (i.e. battery to electrical starter or alternator to battery).

C. EMERGENCY EQUIPMENT - (**All emergency equipment must be readily accessible to the driver.)**

1. Any vehicle not equipped with at least one type 2A10BC, 5 pound pressurized, dry chemical **fire extinguisher** with current certification tag.

2. Any vehicle that does not have a **first aid kit and body fluid kit** readily accessible and labeled.

3. Any vehicle not equipped with at least three reflectorized **triangle road warning devices.**

D. EMERGENCY EXITS

1. Emergency exits that are missing, inoperable, or obstructed. (392.62, 393.203)

2. All emergency doors shall be accessible by a 12 inch minimum aisle. Aisle shall be unobstructed at all times by any type of barrier, seat, wheelchair or tie down, unless a flip seat is installed and occupied. A flip seat in the unoccupied (up) position shall not obstruct the 12 inch minimum aisle to any side emergency door, must be fully operational and flip up with slight hand pressure.

3. The seat backs shall be slanted sufficiently to give aisle clearance of 15 inches at top of seat backs at center line.

4. Any vehicle equipped with a buzzer or bell which does not operate when raised to an open position.

5. Any emergency exit equipped with a starter interlock that is non-operational.

6. Any vehicle whose emergency doors and windows are not marked according to the standards that were in effect at the time the bus was ordered.

   NOTE: Exterior emergency window markings were required after 11-02-92.

   NOTE: Does not include operating instructions.

E. EXHAUST SYSTEM

1. Any bus exhaust system or discharging under the chassis more than 6 inches (15.24) forward of the rear most part of the bus when powered by a gasoline engine, or more than 15 inches (38.1 cm) forward of the rear most part of the bus when powered by other than a gasoline or diesel engine. (393.83)(d))

   NOTE: Engine must be running to verify exhaust leaks.

2. No part of the exhaust system of any motor vehicle shall be so located as to be likely to result in burning, charring, or damaging the electrical wiring, the fuel supply, or any combustible part of the motor vehicle. (393.83(a))

F. FRAMES & BODY

1. **Frame members**

   a. Any cracked, loose, sagging, or broken frame siderail permitting shifting of the body onto moving parts or other condition indicating an imminent collapse of the frame. (393.201(a))

   b. Any cracked, loose, or broken frame member adversely affecting support of functional

components such as steering gear, engine, transmission, body parts, and suspension. (393.201(a))

c. One and one-half inches (38 mm) or longer crack in frame siderail web which is directed toward bottom flange. (393.201(a))

d. Any crack extending from the frame siderail web around the radius and into the bottom flange. (393.201(a))

e. One inch (25mm) or longer crack in siderail bottom flange. (393.201(a))

NOTE: Items (1) and (2) above apply to all buses, including those having unitized (monocoque) construction. Items (3) and (4) apply only to buses having a body-on-chassis design, such as most school buses.

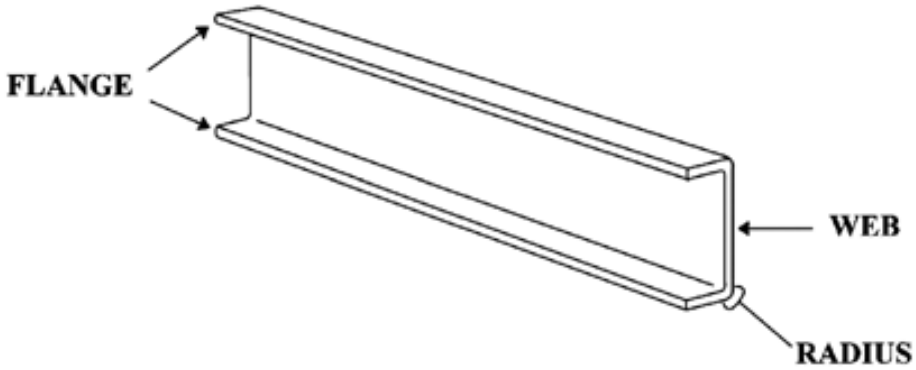

2. Roof/Body Structure (Applicable only to Carpenter School Buses)

a. Any body structure area (roof bow/Carlin rail/window post) that is cracked.

b. Any body structure area (roof bow/Carlin rail/window post) that has been welded and has cracked again, or additional cracks appear in the structural area after initial welding has occurred, is permanently scrapped.

c. Any body structure area (roof bow/Carlin rail/window post) where 20% or more of the structural area is cracked, will be scrapped.

d. Any lower Carlin rail that is cracked all the way through will be scrapped.

NOTE: Carpenter buses roof/body structure will be required to be inspected yearly.

G. FUEL SYSTEM

1. **Liquid Fuels**

a. A fuel system with a dripping leak at any point (including refrigerator or heater fuel systems). (393.67 – Fuel Tank Leak), (396.3(a)(1) – Leak at Other Than Fuel Tank)

b. A fuel tank not securely attached to the vehicle. (393.65)

NOTE: Some fuel tanks use spring or rubber bushings to permit movement. ~~(393.65)~~

2. **Gaseous Fuels**

a. Compressed Natural Gas (CNG), liquefied Petroleum Gas (LPG) and Liquefied Natural Gas (LNG)

b. OCCUPATIONAL SAFETY NOTE: Personnel must exercise extreme caution whenever checking a gaseous fuel system for leaks. Any possibility of creating sparks, static electricity, friction, etc., must be avoided as they could cause a fire or explosion.

c. OCCUPATIONAL SAFETY NOTE: Vehicles with leaking gaseous fuel systems must be parked carefully. Gases escaping from CNG and LNG systems will rise. If the vehicle is parked inside a building or under a canopy, roof or similar cover, combustible gasses can collect beneath the ceiling. Escaping LPG falls and can form a "pool" of combustible gas near the ground and displaces air, including oxygen. LPG and liquid LNG will flow into open drains. Combustible gases can explode when ignited by an open flame or spark.

(a) CNG or LPG

1. Any fuel leakage from the CNG or LPG system detected by smell and verified by either a bubble test using non-ammonia, non-corrosive soap solution or a flammable gas detection meter.

2. Any fuel leakage from the CNG or LPG system detected audibly and verified by either a bubble test using non-ammonia, non-corrosive soap solution or flammable gas detection meter.

NOTE: Verification is needed to ensure that the sound is not either internal to the fuel system (such as gas flowing in a pressure regulator, or pressure equalizing between manifold tanks) or a leak in the air brake system.

3. Any fuel leakage from the CNG or LPG system detected visibly (evidence such as ice buildup or fuel system connections and fittings) and verified by either a bubble test using non-ammonia, non-corrosive soap solution or a flammable gas detection meter.

NOTE: Some brief fuel leakage or decompression may occur during refueling, causing temporary frosting of CNG or LPG fuel system parts. If the vehicle has been refueled shortly before inspection, care must be taken to distinguish these temporary frosting occurrences from actual leaks.

(b) LNG

1. OCCUAPTIONAL SAFETY NOTE: LNG is a cryogenic material and presents a potential safety hazard due both to the extremely cold temperature of its liquid and the

flammability of its vapor. Personnel inspecting such systems should exercise utmost caution including the wearing of proper eye protection, gloves and clothing.

NOTE: LNG liquid and vaporized gas is odorless and undetectable by the human sense of smell. Frost buildup is not necessarily evidence of leakage. Many components of LNG fuel systems are extremely cold and will exhibit an even coat of frost produced by moisture in the surrounding air condensing and freezing on them.

a. A cloud of water vapor coming from any component of the fuel system.

   NOTE: It is normal, particularly in humid conditions, for water vapor to collect around many portions of a LNG fuel system.

b. Any leak detected by a methane detection meter.

c. Dripping liquid that boils or vaporizes in the air.

H. LIGHTING DEVICES (Headlamps, Trail Lamps, Stop Lamps, Turn Signals and Lamps)

1. **Headlamps** - The bus does not have at least one head lamp operating on low beam. (393.24(b)) (393.17 – Driveaway/towaway), (393.9 – Inoperable/obscured)

2. **Lamps on rear** - The bus does not have at least one steady burning tail lamp on the rear of the vehicle, visible from 500 feet (152.4 m). (393.25(b)), (393.9 – Inoperable/obscured)

3. Does not have at least one **operative stop lamp on the rear of a vehicle** visible at 500 feet (152.4 m). (393.25(f), (393.9)

4. Does not have operative **turn signals** visible on each side of the rear of the vehicle. (393.9)

5. **Four way hazard** lights do not fully operate in the front and rear.

6. **Overhead amber flashing lights** do not fully operate when door is closed.

7. **Overhead red flashing lights** that do not fully operate when vehicle is stopped and the loading/unloading door is open.

I. MISCELLANEOUS

1. Any **aisle** that is obstructed or has objects blocking the exits.

2. Any vehicle not equipped with a **crossing control arm,** or any vehicle whose crossing control arm is non-operational.

   NOTE: Crossing control arms are not required for a school bus which is used solely to transport pupils with special needs who are individually loaded and unloaded in a manner which does not

require them to walk in front of the bus.

3. Any vehicle whose **defrosters** are not operational in inclement weather.

4. Handicap Wheelchair Lift

   a. Wheelchair lift does not function as designed or is inoperable.

      NOTE**:** Only applicable when transporting special needs students who would require the use of a handicapped lift.

   b. Any hydraulic line leaking during operation.

   c. Any wheelchair tie down that is missing or improperly installed, loose or damaged.

   d. Any wheelchair tie down this is not secure.

   e. Any lift with a platform barrier/roll stop that is non-operational.

   f. Any wheelchair lift whose brake interlock system, if equipped, is non-operational.

5. Any vehicle whose **handrails** have not been modified to ensure that hood cords, back pack straps or belts will not become entangled.

6. Any vehicle whose **horn** does not work.

7. **Seats**

   a. Any vehicle with a seat that has been placed in the aisle.

   b. Any seat/cushion that is not secured properly.

   c. Any seat/barrier material so defective that it compromises the integrity of occupant protection and compartmentalization.

8. When required, all **seat belts** and restraining devices shall be free from defects.

9. **Stop Signal Arms**

   a. Any vehicle manufactured after October 13, 1987, whose stop signal arm(s) does not fully extend either automatically or manually when activated, or does not have at least one operable warning lamp.

   b. Any vehicle manufactured after October 13, 1987 and equipped with a LED light system, where at least 15% of the LED lights are inoperable.

10. **Windows**

    a. Any vehicle whose windows are cracked with edges protruding on the inside of the bus.

    b. Any vehicle whose windshield glass or driver side window has multiple cracks which obscure the driver's view.

J. STEERING MECHANISM

1. **Steering Wheel Lash** (Free Play) - (See chart below: When any of these values - inch movement or degrees - are met or exceeded, vehicle shall be placed out-of-service.) (393.209(b)) For power steering systems, the engine must be running.

Steering Wheel Diameter	Manual System Movement 30º	Power System Movement 45º
16" (40.6cm)	4 1/2" (11.4cm)(or more)	6 3/4" (17.1cm)(or more)
18" (45.7cm)	4 3/4" (12.7cm)(or more)	7 1/8" (18.1cm) (or more)
19" (48.2cm)	5" (12.7cm)(or more)	7 1/2" (19cm)(or more)
20" (50.8cm)	5 1/4" (13.3cm)(or more)	7 7/8" (20cm)(or more)
21" (53.3cm)	5 1/2" (13.9cm)(or more)	8 1/4" (20.9cm) (or more)
22" (55.8cm)	5 3/4" (14.6cm)(or more)	8 5/8" (21.9cm)(or more)

NOTE: For power systems, if steering wheel movement exceeds 45 degrees before steering axle tires move, proceed as follows: Rock steering wheel left to right between points of power steering valve resistance. If that motion exceeds 30 degrees (or the inch movement values shown for manual steering) vehicle shall be placed out-of-service.

2. **Steering Column**

    a. Any absence or looseness of U-bolt(s) or positioning part(s). (393.209(c))

    b. Obviously repair-welded universal joint(s). (393.209(d))

    c. Steering wheel not properly secured. (393.209(a))

    d. Telescopic steering column does not lock into position. (396.3(a)(1))

    e. Tilt steering column does not lock in at least one position. (396.3(a)(1))

3. **Front Axle Beam and all Steering Components other than Steering Column**: (Include wheel hub)

    a. Any crack(s). (396.3(a)(1))

b. Any obvious welded repair(s). (396.3(a)(1))

4. **Steering Gear Box**

a. Any mounting bolt(s) loose or missing. (393.209(d))

b. Any crack(s) in gear box or mounting brackets. (393.209(d))

c. Any obvious welded repairs. (396.3(a)(1))

d. Any looseness of the yoke-coupling to the steering gear input shaft. (393.209(d))

5. **Pitman Arm**

a. Any looseness of the pitman arm on the steering gear output shaft. (393.209(d))

b. Any obvious welded repairs(s). (396.3(a)(1))

6. **Power Steering**

a. Auxiliary power assist cylinder loose. (393.209(e))

b. Evidence of power steering fluid leaking steadily (showing little variation or fluctuation) from any component in the system. This includes any component that shares the reservoir to the power steering system.

7. **Ball and Socket Joints**

a. Any movement under steering load of a stud nut. (396.3(a)(1))

b. Any motion, other than rotational, between any linkage member and its attachment point of more than 1/8 inch (3.2mm) measured with hand pressure only. (393.209(d))

c. Any obvious welded repair(s). (393.209(d))

8. **Tie Rods and Drag Links**

a. Loose clamp(s) or clamp bolt(s) on tie rods or drag links. (396.3(a)(1))

b. Any looseness in any threaded joint. (396.3(a)(1))

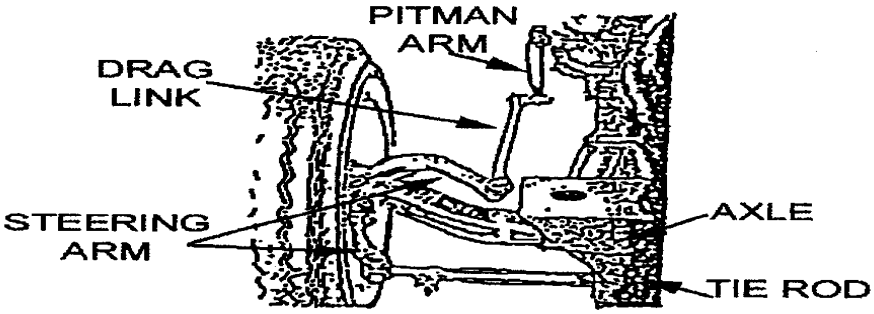

9. **Nuts:** Loose or missing on tie rods, pitman arm, drag link, steering arm, or tie rod arm. (396.3(a)(1))

10. **Steering System:** Any modification or other condition that interferes with the free movement of any steering component. (393.209(d))

K. SUSPENSION

1. **Axle Parts/Members**

   a. Any U-Bolt(s) or other spring to axle clamp bolt(s) cracked, broken, loose, or missing. (393.207(a))

   b. Any axle, axle housing, spring hanger(s), or other axle positioning part(s) cracked, broken, loose, or missing resulting in shifting of an axle from its normal position. (393.207(a))

      NOTE: After a turn, lateral axle displacement is normal with some suspensions including composite springs mounted on steering axles.

2. **Spring Assembly**

   a. One-fourth or more of the leaves in any spring assembly broken. (393.207(c))

   b. Any leaf or portion of any leaf in any spring assembly is missing or separated. (393.207(c))

   c. Any broken main leaf in a leaf spring. (393.207(c))

      NOTES:

      (1) Any leaf of leaf spring assembly is a main leaf if it extends, at both ends, to or beyond:

         (a) The load bearing surface of a spring hanger or equalizer.

         (b) The spring end cap or insulator box mounted on the axle.

         (c) A spring eye, further: Any leaf of a helper spring assembly is a helper main leaf if it extends, at both ends, to or beyond the load bearing surface of its contact pad, hanger,

or equalizer.

(2) The radius rod leaf, in springs having such a leaf, has the same function as the torque or radius components referenced in "Torque, Radius, Tracking or Sway Bar Components," and should be treated as such a component for purposes of out-of-service. (393.207(c))

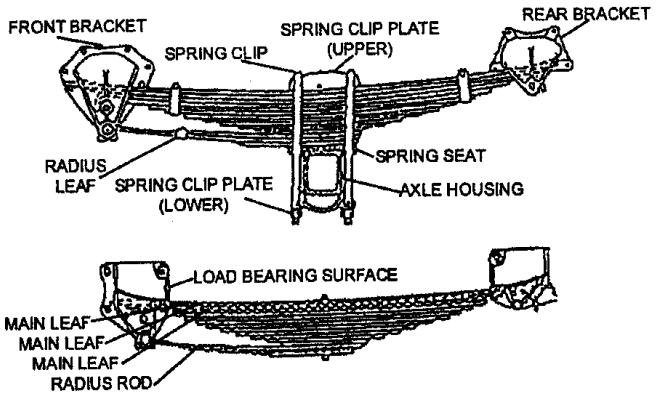

d. Coil spring broken. (393.207(d))

e. Rubber spring missing. (393.207(a))

f. One or more leaves displaced in a manner that could result in contact with a tire, rim, brake, drum, or frame. (393.207(c))

g. Broken torsion bar spring in torsion bar suspension. (393.207(e))

h. Deflated air suspension (i.e., system failure, leak. etc.). (393.207(f))

3. Composite Springs

a. Intersecting cracks of any length. (393.207(c))

b. A crack that extends beyond 3/4 the length of the spring. (393.207(c))

NOTE: A crack is a separation in any axis which passes completely through the spring.

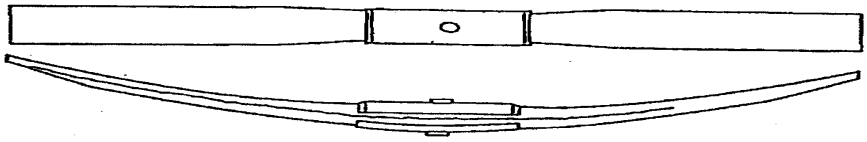

a) Side to side crack extending beyond 3/4 of the length of the spring. (A crack that extends beyond 3/4 the length of the spring.)

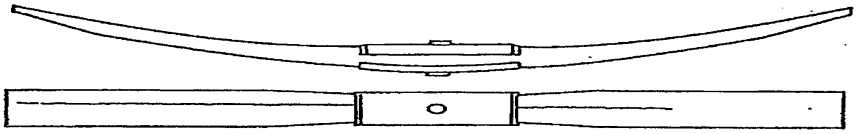

b) Top to bottom crack extending beyond 3/4 of the length of the spring. (A crack that extends beyond 3/4 the length of the spring.)

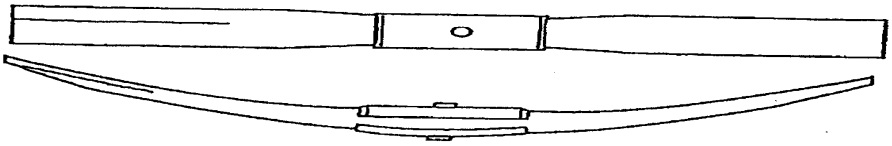

c) Intersecting cracks of any length.

4. Torque, Radius or Tracking Components

a. Any part of a torque, radius, or tracking component assembly or any part used for attaching same to the vehicle frame or axle that is cracked, loose, broken, or missing (including spring leaves used as a radius or torque rod, missing bushings but not loose bushings in torque or track rods). (393.207(a))

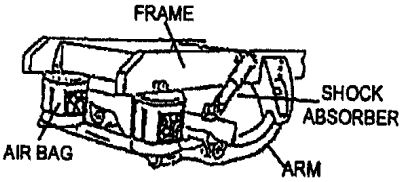

AIR SUSPENSION

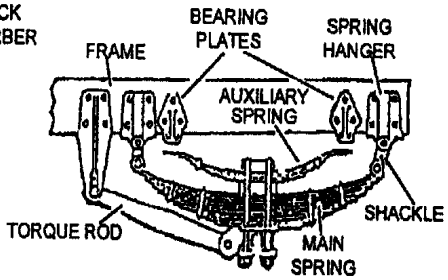

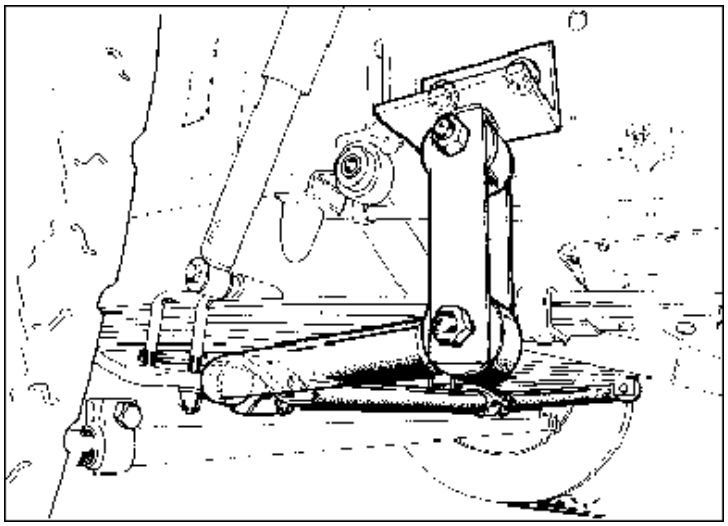

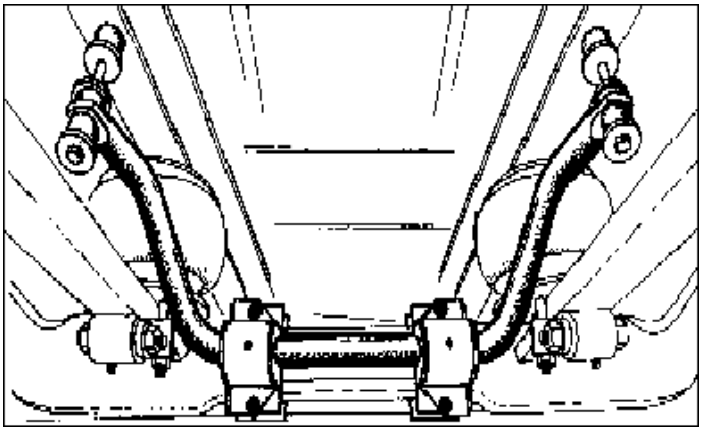

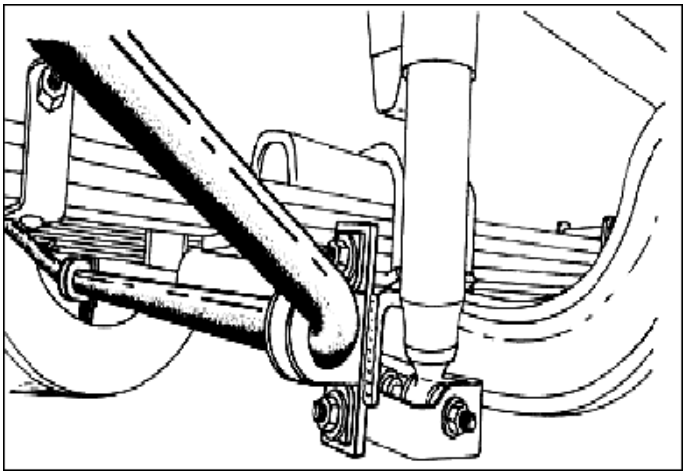

L. TIRES

1. **Any Tire on any Front Steering Axle**

   a. With less than 4/32 inch tread when measured in any two adjacent major tread grooves (typically any groove containing a tread wear indicator) at any location on the tire. Measurements should not be made on stone ejectors or tread wear indicators. (393.75(b))

   b. When any part of the belt material, breaker strip or casing ply is showing in the tread. (393.75(a))

   c. When sidewall is cut, worn, or damaged to the extent that the steel or fabric ply cord is exposed. (393.75(a))

   d. Labeled "Not For Highway Use" or carrying other markings which would exclude use on steering axles. (396.3(a)(1))

   e. Visually observable bump, bulge, or knot apparently related to tread or sidewall separation. (393.75(a))

      EXCEPTION: A bulge (due to a repair) of up to 3/8 inch (9.5mm) in height is allowed. This bulge may sometimes be identified by a blue triangular label in the immediate vicinity.

   f. Tire has noticeable (e.g., can be heard or felt) leak, or has 50 percent or less of the maximum inflation marked on the tire sidewall. (393.75(a)(3))

   g. So mounted or inflated that it comes in contact with any part of the vehicle. (396.3(a)(1))

   h. Front Steering Axle(s): Weight carried exceeds tire load limit. This includes overloaded tire resulting from low air pressure. (393.75(f))

   i. Any vehicle that bias and radial tires have been combined.

   j. Any vehicle with regrooved, recapped, or retread tires. (393.75(d))

   k. Any section tire on the front axle.

2. **All Tires Other than Those Found on the Front Steering Axle**

   a. Tire has noticeable (e.g., can be heard or felt) leak, or has 50 percent or less of the maximum inflation pressure marked on the tire sidewall. (393.75(a)(3))

   b. Any tire with visually observable bump or knot apparently related to tread or sidewall separation. (393.75 (a))

      EXCEPTION: A bulge due to a repair of up to 3/8 inch (9.5 mm) in height is allowed. The bulge may sometimes be identified by a blue triangular label in the immediate vicinity.

c. So mounted or inflated that it comes in contact with any part if the vehicle. (396.3(a)(1))

NOTE: This includes any tire contacting its mate in a dual set.

d. Weight carried exceeds tire load limit. This includes overloaded tire resulting from low air pressure. (393.75(f))

e. Seventy-five percent or more of the tread width loose or missing, in excess of 12 inches (30.4 cm) in circumference. (396.3(a)(1))

f. Bias Ply Tire**:** When more than one ply is exposed in the tread area or sidewall or when the exposed area of the top ply exceeds 2 square inches (12.9 sq. cm). (393.75(a)(1))

g. Radial Ply Tire**:** When two or more plies are exposed in the tread area or damaged cords are evident in the sidewall or when the exposed area exceeds 2 square inches (12.9 sq. cm.) in the sidewall. (393.75(a)(1))

h. So worn that less that 2/32 inch tread remains when measured in any two adjacent major tread grooves (typically any groove containing a tread wear indicator) or 3 separate locations on the tire. (Measurements should not be made on stone ejectors or tread wear indicator. (393.75(c))

i. Any vehicle where bias and radial tires have been combined.

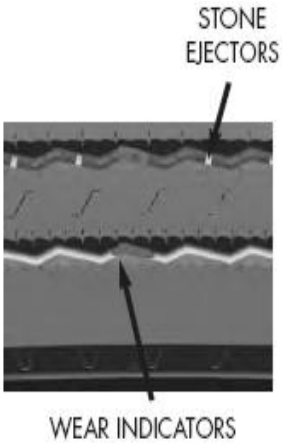

M. WHEELS, RIMS, and HUBS

1. **Lock or Side Ring** - Bent, broken, cracked, improperly seated, sprung, or mismatched ring(s). (393.205(a))

2. **Rim Cracks** - Any circumferential crack except an intentional manufactured crack at a valve stem hole. (393.205(a))

3. **Disc Wheel Cracks**

   a. Any crack 3 inches (76.2 mm) or more in length. (393.205(a))

   b. A crack extending between any two holes (hand holes, stud holes and center holes). (393.205(a)).

   a. Two or more cracks anyplace on the wheel. (393.205(a))

4. **Bolt/Stud Holes (Disc Wheels)** - Any visible elongated bolt/stud hole. (393.205(b))

5. **Spoke Wheel Cracks**

   a. Two or more cracks more than 1 inch (25.4 mm) long across spoke or hub section. (393.205(a))

   b. Two or more web areas with cracks. (393.205(a))

6. **Tubeless Demountable Adapter Cracks** - crack exceeding 3 inches (76.2 mm). (393.205(a))

7. **Wheel Fasteners** - Loose, missing, broken, cracked, or stripped wheel fasteners that are ineffective as follows: for 10 fastener positions - 3 anywhere or 2 adjacent; for 8 fastener positions or less - 2 anywhere (this applies to both spoke and disc wheels).. (393.205(c))

8. **Welds**

   a. Any cracks in welds attaching disc wheel disc to rim. (393.205(a))

   b. Any crack in welds attaching tubeless demountable rim to adapter. (393.205(a))

   c. Any welded repair on any aluminum wheel(s). (396.3(a)(1))

   d. Any welded repair other than disc to rim attachment on steel disc wheel(s). (396.3(a)(1))

9. **Hubs**

   a. When any axle bearing (hub) cap, plug or filler plug is missing or broken allowing an open view into hub assembly. (396.3(a)(1) or 396.7)

   b. Smoking from wheel hub assembly due to bearing failure. (396.3(a)(1) or 396.7)

NOTE: Also refer to Brakes, as the cause may either be the brakes or a problem in the hub and bearing area.

c. When any wheel seal is leaking. This must include evidence of wet contamination of the brake friction material and accompanied by evidence that further leaking will occur. (396.5)

NOTE: Also refer to Brakes, as the cause may either be the brakes or a problem in the hub and bearing area.

NOTE: Grease/oil on the brake lining edge, back of shoe, or drum edge and oil stain with no evidence of fresh oil leakage are not conditions for out-of-service.

d. No visible or measurable amount of lubricant showing in hub. (393.3(a)(1)) or (396.7)

10. **Tire and Wheel Clearance -** Any condition, including loading that causes the body or frame to be in contact with a tire or any part of the wheel assemblies, at the time of inspection. (396.3(a)(1))

N. WINDSHIELD WIPERS

1. Any school bus that has inoperative wipers or missing or damaged parts that renders it ineffective. (393.78)